Project name:

Fixture type:

Date:

Adjustable Hole Cutter Replacement Parts

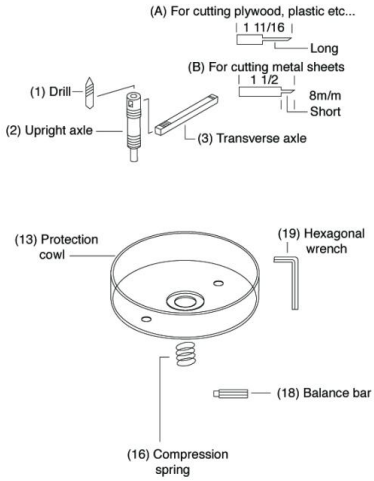

Features

Options

Drill Bit

Upright Axle

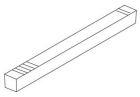

Traverse Axle

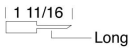

Blade A for plywood or plastics, etc

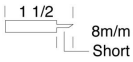

Blade B for sheet metal

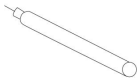

Adjusting Rod

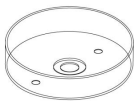

Protection Cowl

Compression Spring

Balance Bar

Allen Wrench

Product Number

© ELCO Lighting 2026. All rights reserved • Rev. 12 Feb 2025 • ELCO Lighting reserves the right to make specification and design changes without notice.

Item	Description
EL6003	Transverse Axle for EL6000

2042 E. Vernon Ave., Vernon, CA 90058 • Tel (323) 231-2600 Fax (323) 231-3200 • elcolighting.com
© ELCO Lighting 2026. All rights reserved • Rev. 12 Feb 2025 • ELCO Lighting reserves the right to make specification and design changes without notice.