ELCO Lighting

Project name:

Fixture type:

Date:

# 6" Drop Glass Reflector

The perfect lighting solution for high-end residential projects with existing housings.

## Features

- Module includes LED Module Driver.
- Frosted acrylic lens for even lumen distribution.
- USA designed and assembled
- Title 24 JA8-2019 Compliant
- Life span of 50,000 hours L70
- Limited 5 year warranty

## Specifications

| | |
|---|---|
| **Wattage** | 15.7W |
| **Lumens** | 1250 lm |
| **Voltage** | 120V |
| **Color Temp.** | 5000K |
| **Dimmable** | Triac/ELV |
| **Lamp Type** | LED |
| **Beam Angle** | 60° |
| **CRI** | 93+ |
| **Wet Location** | Listed |

## Options

**All White**

**Black w/White Ring**

**All Bronze**

**Chrome w/White Ring**

**Gold w/White Ring**

**Haze w/White Ring**

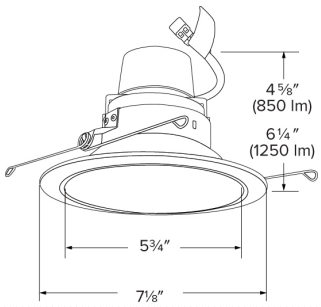


## Technical Details

**Optics**: Frosted polycarbonate module lens diffuses light evenly throughout while reducing glare with LED technology.

**Trim Construction**: Reflector is two piece trim for maximum color versatility. Design allows for minimal glare and a strong glare cut-off. Trim is constructed of metal for lasting durability.

**LED Technology:**

- Extremely accurate Color Rendering Index of 93+.
- Efficacy of 97 lumens per watt.
- Lumen Maintaince of 50,000 hours L70 Life based on LM80 standardized test results.
- Superior Thermal Management by utilizing ELCO Red heat sink.
- Instant On to Full Brightness technology.
- No LED pixilation.

**Sunset:** Sunset color temperature is our dim-to-warm LED technology that allows the color temperature to become warmer as the product is dimmed. Our SUNSET items start at 3000K and go as low as 1800K when dimmed. For Sunset dim technology be sure to order an item with "Sunset" in the Color Temperature (CCT) attribute.

**Listings**: cUL Listed for Wet Location. RoHS Compliant. Title 24 JA8-2019 Compliant.

2042 E. Vernon Ave., Vernon, CA 90058 • Tel (323) 231-2600 Fax (323) 231-3200 • elcolighting.com
© ELCO Lighting 2026. All rights reserved • Rev. 06 Nov 2024 • ELCO Lighting reserves the right to make specification and design changes without notice.

## Product Number Builder Example: **E612R0827W**

| ELCO 4" Drop Glass | Lumens | Color Temp | Finish | Beam Angle |
|---|---|---|---|---|
| **E612R** | | | | |
| | **08** 850 lm | **27** 2700K | **W** All White | 60º lens |
| | **12** 1250 lm | **30** 3000K | **B** Black with White Ring | **-F** 38º lens |
| | | **35** 3500K | **BZ** All Bronze | **-N** 24º lens |
| | | **40** 4000K | **C** Chrome with White Trim | **-S** 15º lens |
| | | **50** 5000K | **G** Gold with White Trim | |
| | | **SD** Sunset [1] | **H** Haze with White Trim | |

[1] Sunset, Dim to Warm technology, automatically transitions from 3000K to 1800K when dimmed


© ELCO Lighting 2026. All rights reserved • Rev. 06 Nov 2024 • ELCO Lighting reserves the right to make specification and design changes without notice.

# Compatible Products

For use with **6″ Cedar™ LED Module & Driver**

## 6″ Dedicated LED ICA Housings

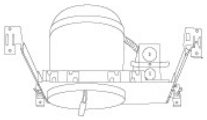

6″ IC Housing
New Construction

| CAT NO. | SPECIFICATIONS |
|---|---|
| EL770ICA | 24W MAX. |

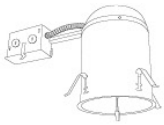

6″ ICA Housing
Remodel

| CAT NO. | SPECIFICATIONS |
|---|---|
| EL770RICA | 24W MAX. |

## 6″ Accessories

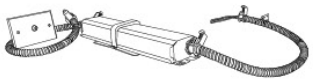

Emergency Battery Backup

| CAT NO. | SPECIFICATIONS |
|---|---|
| KEM-LD5 | 8W, 120/277V |

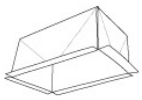

Fire Enclosure

| CAT NO. | SPECIFICATIONS |
|---|---|
| FIREENCL | 20 ⅜″ L x 14 ⅜″ W |
| FIREENCL-S | Shallow, 16″ L x 14 ⅜″ W |

Mica Fire Tape

| CAT NO. | SPECIFICATIONS |
|---|---|
| FIRETAPE | ¾″ W x 16′ L |

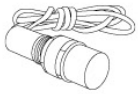

Automatic Daylight Control Sensor

| CAT NO. | SPECIFICATIONS |
|---|---|
| EADC1 | For use with 0-10V frames. |

Socket Adapter

| CAT NO. | SPECIFICATIONS |
|---|---|
| PSA30 | E26 to Quick Connect |


© ELCO Lighting 2026. All rights reserved • Rev. 06 Nov 2024 • ELCO Lighting reserves the right to make specification and design changes without notice.

# Dimmer Compatibility Chart
# LED Module & Driver

## For Reference Only

Testing conducted by ELCO Lighting is not a substitute for and does not imply certification by an independent laboratory or any other standards certification. Refer to manufacturer specifications for more detailed information on product certifications and standards. Consult the dimmer manufacturer prior to installation to ensure compatibility.

| Manufacturer | Product | Part Number | Dimmed Light Output Range |
|---|---|---|---|
| **Triac/ELV** | | | |
| Cooper | ASPIRE Decorator Single Pole/3-Way Dimmer | 9573WS | 10% - 100% |
| | DEVINE Decorator Dimmer | DI06P-A-K | 10% - 100% |
| Legrand | Adorne® Paddle 450W Single Pole/3-Way Dimmer | ADPD453L-W2 | 10% - 100% |
| Leviton | Illumatech Single Pole/3-Way Incandescent Dimmer | IPI06 | 10% - 100% |
| | Decora Sureslide Single Pole Slide-to-Off Incandescent Dimmer | 6631-LW | 10% - 100% |
| | Decora Sureslide Single Pole/3-Way Magnetic Low Voltage Dimmer | 6613-PL | 8% - 100% |
| Lutron | Skylark® Single Pole/3-Way Incandescent/Halogen “Eco-Dim” Dimmer | S-603PG | 5% - 85% |
| | Diva® C•L Single Pole/3-Way Dimmer | DVCL-153PR | 7%-100% |
| | Ariadni Single Pole/3-Way Dimmer | AY-600P-AL | 10% - 100% |
| | Maestro® Incandescent/Halogen Digital Fade Dimmer | MRF2-600M-WH | 10% - 100% |
| | Skylark® Single Pole/3-Way Incandescent/Halogen Dimmer | S-600P-AL | 10% - 100% |
| | Diva® Single Pole Incandescent/Halogen Dimmer | DV-600P-WH | 10% - 100% |
| | Nova® Single Pole Incandescent/Halogen Slide-to-Off Dimmer | N-600 | 10% - 100% |
| | Skylark® Single Pole Magnetic Low Voltage Dimmer | SLV-600-WH | 8% - 100% |
| | Glyder® Single Pole Magnetic Low Voltage Dimmer | GLV-600-WH | 8% - 100% |

*NOTE: Refer to dimmer manufacturer’s documentation for installation instructions and circuit details

Disclaimer: Minimum and maximum loads for LEDs and CFLs are given in number of lamps and may vary depending on the lamp being used. Testing conducted by ELCO Lighting is not a substitute for and does not imply certification by an independent laboratory or any other standards certification. Refer to manufacturer specifications for more detailed information on product certifications and standards.

2042 E. Vernon Ave. Vernon CA 90058 Tel 323.231.2600 Fax 323.231.3200 elcolighting.com


© ELCO Lighting 2026. All rights reserved • Rev. 06 Nov 2024 • ELCO Lighting reserves the right to make specification and design changes without notice.