ELCO Lighting

Project name:

Fixture type:

Date:

6" Drop Glass Reflector

The perfect lighting solution for high-end residential projects with existing housings.

Features

- Module includes LED Module Driver.
- Frosted acrylic lens for even lumen distribution.
- USA designed and assembled
- Title 24 JA8-2019 Compliant
- Life span of 50,000 hours L70
- Limited 5 year warranty

Specifications

Wattage	15.7W
Lumens	1250 lm
Voltage	120V
Color Temp.	3500K
Dimmable	Triac/ELV
Lamp Type	LED
Beam Angle	60°
CRI	93+
Wet Location	Listed

Options

All White

Black w/White Ring

All Bronze

Chrome w/White Ring

Gold w/White Ring

Haze w/White Ring

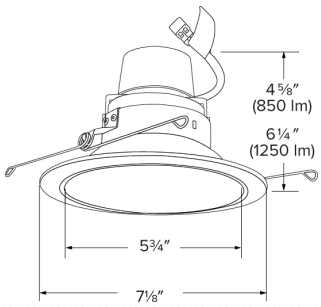

Technical Details

Optics: Frosted polycarbonate module lens diffuses light evenly throughout while reducing glare with LED technology.

Trim Construction: Reflector is two piece trim for maximum color versatility. Design allows for minimal glare and a strong glare cut-off. Trim is constructed of metal for lasting durability.

LED Technology:

- Extremely accurate Color Rendering Index of 93+.
- Efficacy of 97 lumens per watt.
- Lumen Maintaince of 50,000 hours L70 Life based on LM80 standardized test results.
- Superior Thermal Management by utilizing ELCO Red heat sink.
- Instant On to Full Brightness technology.
- No LED pixilation.

Sunset: Sunset color temperature is our dim-to-warm LED technology that allows the color temperature to become warmer as the product is dimmed. Our SUNSET items start at 3000K and go as low as 1800K when dimmed. For Sunset dim technology be sure to order an item with "Sunset" in the Color Temperature (CCT) attribute.

Listings: cUL Listed for Wet Location. RoHS Compliant. Title 24 JA8-2019 Compliant.

2042 E. Vernon Ave., Vernon, CA 90058 • Tel (323) 231-2600 Fax (323) 231-3200 • elcolighting.com
© ELCO Lighting 2026. All rights reserved • Rev. 06 Nov 2024 • ELCO Lighting reserves the right to make specification and design changes without notice.

Product Number Builder Example: **E612R0827W**

ELCO 4" Drop Glass	Lumens	Color Temp	Finish	Beam Angle
E612R				
	08 850 lm	**27** 2700K	**W** All White	60º lens
	12 1250 lm	**30** 3000K	**B** Black with White Ring	**-F** 38º lens
		35 3500K	**BZ** All Bronze	**-N** 24º lens
		40 4000K	**C** Chrome with White Trim	**-S** 15º lens
		50 5000K	**G** Gold with White Trim	
		SD Sunset [1]	**H** Haze with White Trim	

[1] Sunset, Dim to Warm technology, automatically transitions from 3000K to 1800K when dimmed

© ELCO Lighting 2026. All rights reserved • Rev. 06 Nov 2024 • ELCO Lighting reserves the right to make specification and design changes without notice.

Compatible Products

For use with **6″ Cedar™ LED Module & Driver**

6″ Dedicated LED ICA Housings

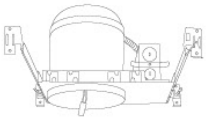

6″ IC Housing
New Construction

CAT NO.	SPECIFICATIONS
EL770ICA	24W MAX.

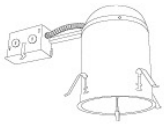

6″ ICA Housing
Remodel

CAT NO.	SPECIFICATIONS
EL770RICA	24W MAX.

6″ Accessories

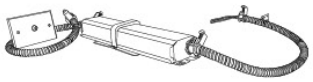

Emergency Battery Backup

CAT NO.	SPECIFICATIONS
KEM-LD5	8W, 120/277V

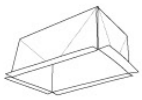

Fire Enclosure

CAT NO.	SPECIFICATIONS
FIREENCL	20 ⅜″ L x 14 ⅜″ W
FIREENCL-S	Shallow, 16″ L x 14 ⅜″ W

Mica Fire Tape

CAT NO.	SPECIFICATIONS
FIRETAPE	¾″ W x 16′ L

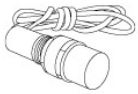

Automatic Daylight Control Sensor

CAT NO.	SPECIFICATIONS
EADC1	For use with 0-10V frames.

Socket Adapter

CAT NO.	SPECIFICATIONS
PSA30	E26 to Quick Connect

© ELCO Lighting 2026. All rights reserved • Rev. 06 Nov 2024 • ELCO Lighting reserves the right to make specification and design changes without notice.

Dimmer Compatibility Chart
LED Module & Driver

For Reference Only

Testing conducted by ELCO Lighting is not a substitute for and does not imply certification by an independent laboratory or any other standards certification. Refer to manufacturer specifications for more detailed information on product certifications and standards. Consult the dimmer manufacturer prior to installation to ensure compatibility.

Manufacturer	Product	Part Number	Dimmed Light Output Range
Triac/ELV			
Cooper	ASPIRE Decorator Single Pole/3-Way Dimmer	9573WS	10% - 100%
	DEVINE Decorator Dimmer	DI06P-A-K	10% - 100%
Legrand	Adorne® Paddle 450W Single Pole/3-Way Dimmer	ADPD453L-W2	10% - 100%
Leviton	Illumatech Single Pole/3-Way Incandescent Dimmer	IPI06	10% - 100%
	Decora Sureslide Single Pole Slide-to-Off Incandescent Dimmer	6631-LW	10% - 100%
	Decora Sureslide Single Pole/3-Way Magnetic Low Voltage Dimmer	6613-PL	8% - 100%
Lutron	Skylark® Single Pole/3-Way Incandescent/Halogen “Eco-Dim” Dimmer	S-603PG	5% - 85%
	Diva® C•L Single Pole/3-Way Dimmer	DVCL-153PR	7%-100%
	Ariadni Single Pole/3-Way Dimmer	AY-600P-AL	10% - 100%
	Maestro® Incandescent/Halogen Digital Fade Dimmer	MRF2-600M-WH	10% - 100%
	Skylark® Single Pole/3-Way Incandescent/Halogen Dimmer	S-600P-AL	10% - 100%
	Diva® Single Pole Incandescent/Halogen Dimmer	DV-600P-WH	10% - 100%
	Nova® Single Pole Incandescent/Halogen Slide-to-Off Dimmer	N-600	10% - 100%
	Skylark® Single Pole Magnetic Low Voltage Dimmer	SLV-600-WH	8% - 100%
	Glyder® Single Pole Magnetic Low Voltage Dimmer	GLV-600-WH	8% - 100%

*NOTE: Refer to dimmer manufacturer’s documentation for installation instructions and circuit details

Disclaimer: Minimum and maximum loads for LEDs and CFLs are given in number of lamps and may vary depending on the lamp being used. Testing conducted by ELCO Lighting is not a substitute for and does not imply certification by an independent laboratory or any other standards certification. Refer to manufacturer specifications for more detailed information on product certifications and standards.

2042 E. Vernon Ave. Vernon CA 90058 Tel 323.231.2600 Fax 323.231.3200 elcolighting.com

© ELCO Lighting 2026. All rights reserved • Rev. 06 Nov 2024 • ELCO Lighting reserves the right to make specification and design changes without notice.