ELCO Lighting

Project name:

Fixture type:

Date:

3" New Construction Housing

3" new construction housing featuring a twist and lock socket for use with 120V GU10 MR16 LED lamps.

Features

- Single wall IC construction, for use in insulated ceilings.
- Flicker Free LED Dimming.
- Lamp: 120V, MR16 GU-10 LED (not included).
- Lamp Holder: Twist-and-lock GU10 MR16 lampholder.
- Trims sold separately

Specifications

Wattage	12W
Voltage	120V or 277V
Lamp Type	GU10
Wet Location	Listed with Shower Trims
Damp Location	Listed

Dimensions

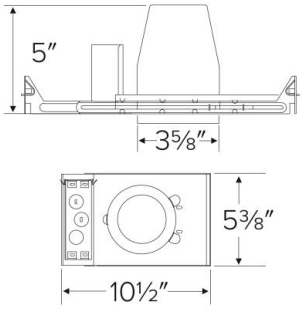

Technical Details

Construction:
- Single wall IC rated for direct contact with insulation, for use in IC or non-IC conditions.
- Housing adjusts in frame to accommodate up to 1 1/4" ceiling thickness.
- Steel housing for greater heat dissipation. Stamped galvanized steel frame.

Installation: Designed for ceiling plenums where 2x6 joists or taller joists are used. High strength hanger bars can easilty be nailed to joists. Maximum hole cutout is 3 5/8". Suitable for T-grid and drop ceiling applications. See installation sheet for detailed information.

Junction Box: Positioned to accommodate straight conduit runs. Seven 1/2" trade size conduit knockouts, four 3/4" knockouts with pry-out knockout slots. 4 Romex pryouts with strain relief.

Hanger Bars: Pre-installed hanger bars with True Nail facilitate easy installation in regular lumber, engineered lumber, and laminated beams. Integral T-bar slots for easy installation in T-bars. Spans up to 24" and can be repositioned 90°. Score lines allow for tool-free hanger bar size reduction. Integral leveling flange allows for single-person installation while aligning the housings with the joists.

Electrical:
- Input Voltage: 120V AC.
- EL39LDICA-7 includes 277V to 120V step-down transformer.
- Thermally protected against improper lamping.

Trims: Compatible with ELCO 3" MR16 trims.

Lamp: Designed for use with GU10 MR16 LED lamps.

Dimmability: Dimmability based on lamp.

Listings:
- cUL Listed for Damp Location.
- cUL Listed for Wet Location with select trims.
- cUL Listed for Feed Through.
- cUL Listed for Direct Contact with Insulation and Combustible Material.
- Airtight per ASTM E-283.
- Install a JA8-2016-E lamp/luminaire for Title 24 Compliance.

Warranty: ELCO Lighting warrants products will be free from defects in materials and workmanship for a period of 3 years.

Product Numbers

Item	Description	Lamp type	Watts	Voltage
EL39LDICA		GU10	12W	120V
EL39LDICA-7	with 277V to 120V Step-Down Transformer	GU10	12W	277V

2042 E. Vernon Ave., Vernon, CA 90058 • Tel (323) 231-2600 Fax (323) 231-3200 • elcolighting.com
© ELCO Lighting 2026. All rights reserved • Rev. 19 Mar 2024 • ELCO Lighting reserves the right to make specification and design changes without notice.